Valves

W456025 Series
Trinity Style Gate Valves

W456025
Horizontal Pattern Gate Valve

Trinity Type in L/A.
Non-rising stem.

2" full bore valve with bolted bonnet.
Inlet 2½" inst. male to BS336:2010.
Outlet 2½" inst. female to BS336:2010.

Light alloy - LM25 TF to BS1490 - natural finish.
Weight - 2.2 kg approx.
Nom Dims: - 190mm x 190mm x 120mm deep

Maximum w.p. 16 bar
Test Pressure 24 bar

Manufactured in the UK.

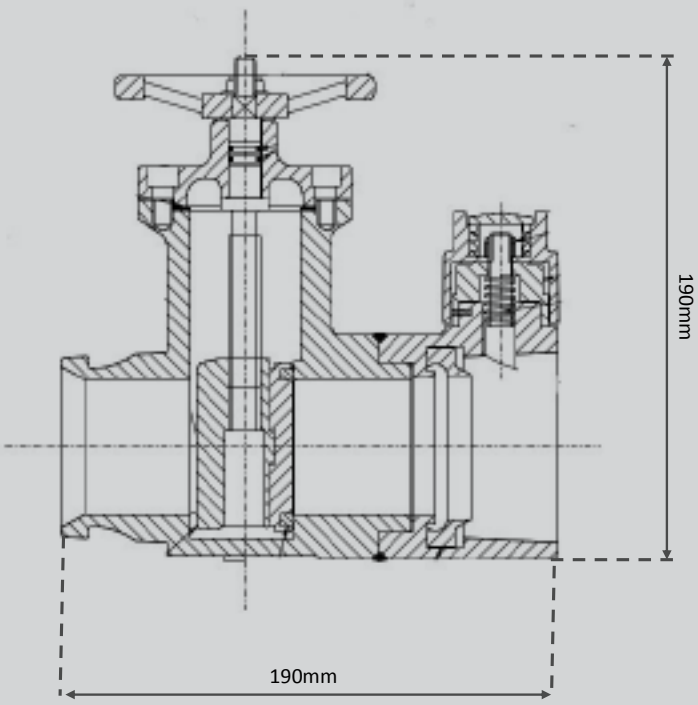

Fire Hosetech Limited,
Unit 1 Sowarth Field Industrial Estate, Settle, North Yorkshire, BD24 9AG
+44 (0)1729 825 999 | info@firehosetech.co.uk | www.firehosetech.co.uk